Cambridge Assessment International Education

Cambridge IGCSE™

CANDIDATE NAME	

CENTRE NUMBER						CANDIDATE NUMBER					

PHYSICS **0625/42**

Paper 4 Theory (Extended) **October/November 2020**

1 hour 15 minutes

You must answer on the question paper.

No additional materials are needed.

INSTRUCTIONS

- Answer **all** questions.
- Use a black or dark blue pen. You may use an HB pencil for any diagrams or graphs.
- Write your name, centre number and candidate number in the boxes at the top of the page.
- Write your answer to each question in the space provided.
- Do **not** use an erasable pen or correction fluid.
- Do **not** write on any bar codes.
- You may use a calculator.
- You should show all your working and use appropriate units.
- Take the weight of 1.0 kg to be 10 N (acceleration of free fall = 10 m/s^2).

INFORMATION

- The total mark for this paper is 80.
- The number of marks for each question or part question is shown in brackets [ ].

This document has **16** pages. Blank pages are indicated.

DC (CJ/CGW) 196149/3
© UCLES 2020

[Turn over

www.root19.com +91 - 9969 353 391

1 A sky-diver jumps out of a hot-air balloon, which is 4000 m above the ground. At time = 30 s, she opens her parachute.

Fig. 1.1 is the speed-time graph of her fall.

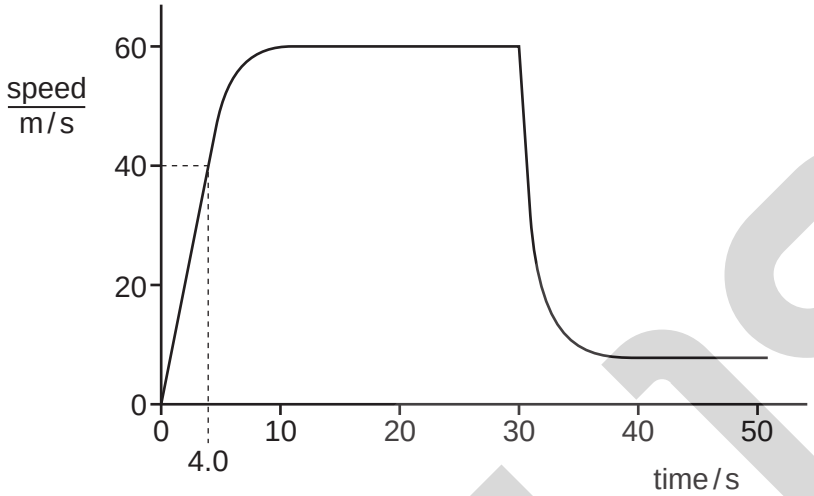

Fig. 1.1

(a) **(i)** Label with the letter X the point on the graph where the sky-diver opens her parachute. [1]

(ii) Label with the letters Y and Z the **two** parts of the graph where the sky-diver falls at terminal velocity. [1]

(b) Describe, in terms of the forces acting on the sky-diver, her motion between leaving the balloon and opening her parachute.

.....

.....

.....

.....

.....

..... [4]

(c) Calculate the average speed of the sky-diver in the first 4.0 s of her fall.

average speed = ... [2]

[Total: 8]

www.root19.com +91 - 9969 353 391

2 **(a)** Define the moment of a force about a point.

.....

..... [1]

(b) Fig. 2.1 shows a uniform rod of wood suspended from a pivot.

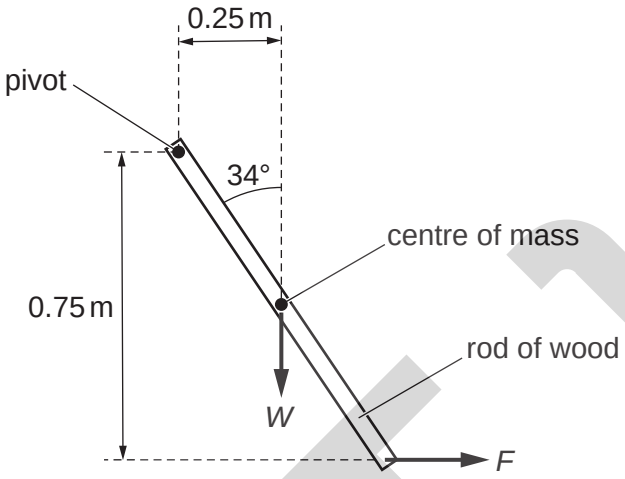

Fig. 2.1 (not to scale)

The rod is held stationary by a horizontal force *F* acting as shown.
The mass of the rod is 0.080 kg.

Calculate:

(i) the weight *W* of the rod

weight = ... [1]

(ii) the moment of *W* about the pivot

moment = ... [2]

(iii) the moment of *F* about the pivot

moment = ... [1]

(iv) the force *F*.

force = ... [2]

www.root19.com +91 - 9969 353 301

(c) The angle between the rod and the vertical is increased.

State whether the force *F* needed to hold the rod stationary must be increased, decreased or stay the same.
Explain your answer.

.....

.....

.....

..... [2]

[Total: 9]

© UCLES 2020
www.root19.com

+91 - 9969 353 391

3 The kinetic energy of air passing through a wind turbine every minute is 720 000 J. The electrical output of the turbine is 9.0 A at a potential difference (p.d.) of 240 V.

Calculate the efficiency (%) of the wind turbine.

efficiency = ... % [5]

© UCLES 2020

www.root19.com +91 - 9969 353 301

4 Fig. 4.1 shows a thermometer.

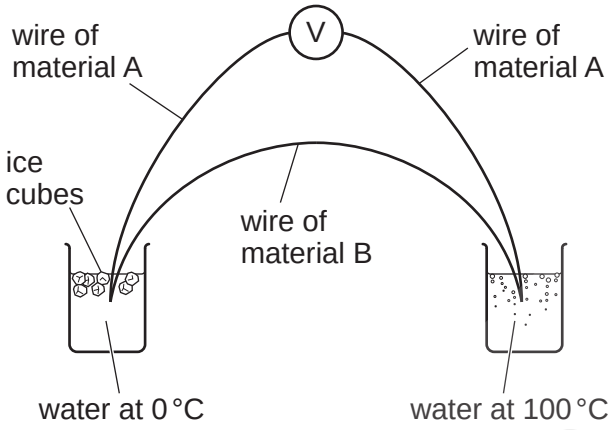

Fig. 4.1

The voltmeter reading is 5.4 mV.

(a) State the name of this type of thermometer.

..... [1]

(b) Fig. 4.2 shows the same thermometer used to measure the temperature of liquid X.

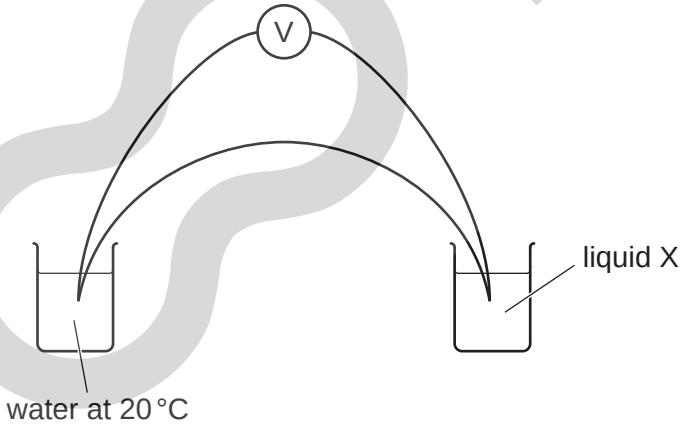

Fig. 4.2

With the setup in Fig. 4.2, the voltmeter reading is 1.7 mV.

Calculate the temperature of liquid X measured by the thermometer.

temperature = ... [2]

www.root19.com +91 - 9969 353 391

(c) Suggest an application for which this type of thermometer is more suitable than a liquid-in-glass thermometer.

..... [1]

[Total: 4]

© UCLES 2020

www.root19.com
+91 - 9969 353 301

5 **(a)** **(i)** Define specific latent heat.

.....

..... [2]

(ii) Explain the melting of a solid in terms of molecules and energy.

.....

.....

.....

..... [2]

(b) An electrical heater is used to heat a liquid to its boiling point. Fig. 5.1 shows the apparatus.

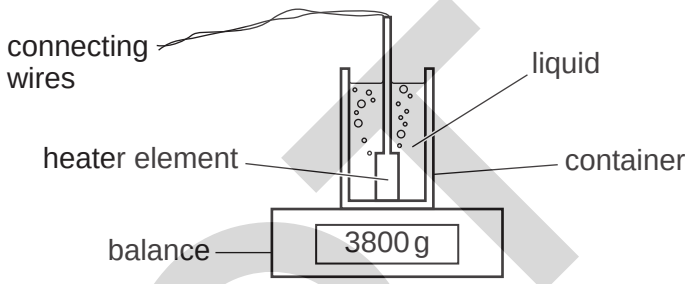

Fig. 5.1

When the liquid is boiling, the heater supplies 1.26 MJ of thermal energy. The mass reading shown on the balance decreases from 3800 g to 2300 g.

Calculate the specific latent heat of vaporisation of the liquid.

specific latent heat = ... [3]

(c) State and explain a precaution to improve the accuracy of the value of specific latent heat calculated in **(b)**.

.....

.....

.....

..... [2]

[Total: 9]

www.root19.com +91 - 9969 353 391

6 Fig. 6.1 shows a transverse wave produced in a string.

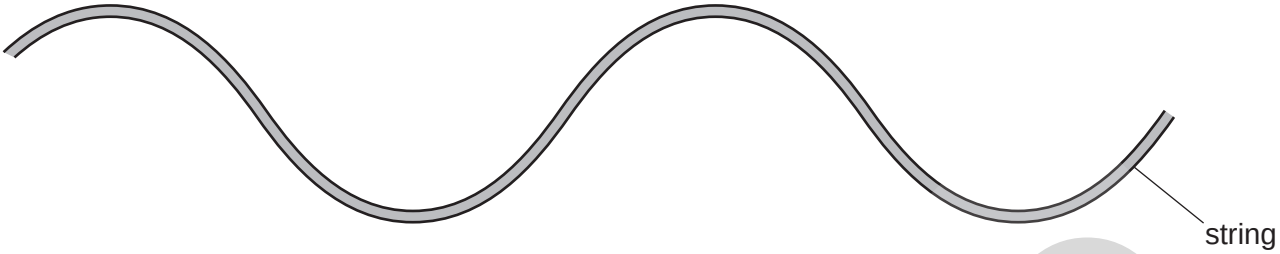

Fig. 6.1 (full size)

(a) On Fig. 6.1:

(i) draw labelled lines to show

1. the amplitude of the wave

2. the wavelength of the wave

[2]

(ii) label a trough with the letter T. [1]

(b) A person vibrates one end of the string vertically to produce the wave. He makes 15 complete oscillations in 60 s.

Show that the speed of the wave is 2.0 cm / s.

[3]

(c) State the difference between transverse waves and longitudinal waves. Use your ideas about the direction of oscillations.

transverse waves .....

.....

longitudinal waves .....

.....

[2]

[Total: 8]

www.root19.com +91 - 9969 353 301

7 Fig. 7.1 shows a ray of light passing through an optical fibre.

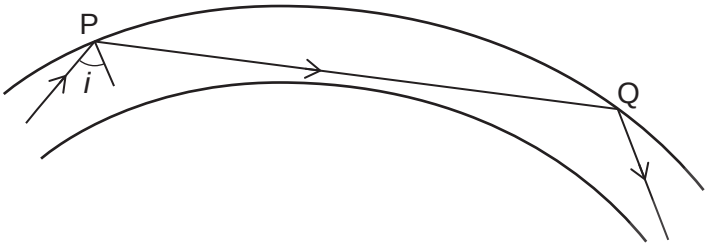

Fig. 7.1

The optical fibre is made of glass that has a refractive index of 1.4.

(a) **(i)** No light refracts from the fibre at points P and Q.

State the name of the process that occurs at P and Q.

..... [1]

(ii) Calculate the minimum value of angle *i* for there to be no refraction at point P.

angle = ... [2]

(b) State and explain the use of optical fibres in medicine.

.....

.....

.....

.....

.....

..... [3]

(c) The ray of light shown in Fig. 7.1 is monochromatic light from a laser.

State what is meant by monochromatic light. Use **one** of the following quantities in your answer.

amplitude **brightness** **frequency** **refractive index** **speed**

.....

..... [2]

[Total: 8]

www.root19.com +91 - 9969 353 391

8 **(a)** State and explain why electrical sockets and plugs used outside in a garden need to be different from those that can be used safely in a room inside a house.

.....

.....

.....

..... [2]

(b) State and explain why fuses and circuit breakers are installed in electrical circuits connected to the mains supply.

.....

.....

.....

..... [2]

[Total: 4]

© UCLES 2020

www.root19.com
+91 - 9969 353 301

9 **(a)** Fig. 9.1 shows a bar magnet and four plotting compasses A, B, C and D.

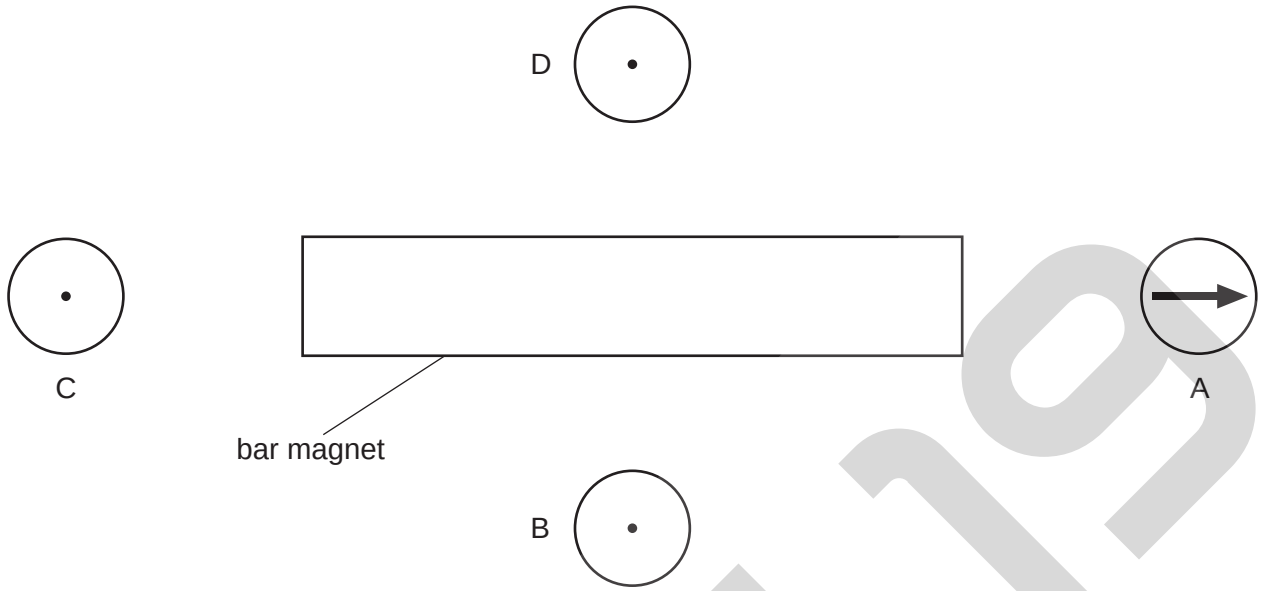

Fig. 9.1

On Fig. 9.1:

(i) draw an arrow on each of the three plotting compasses B, C and D to show the direction of the magnetic field [2]

(ii) label the magnetic poles of the bar magnet N and S. [1]

(b) Describe **one** method for demagnetising a bar magnet.

.....

.....

.....

..... [2]

© UCLES 2020
www.root19.com

+91 - 9969 353 391

(c) Fig. 9.2 represents a current in a wire. The current is into the plane of the paper.

(i) Draw the pattern of the magnetic field produced around the wire. Show clearly the direction of the magnetic field.

Fig. 9.2

[2]

(ii) The direction of the current in the wire is reversed. The magnitude of the current is unchanged.

State the effect that reversing the current has on the magnetic field produced.

.....

..... [1]

[Total: 8]

ROOT 19

www.root19.com +91 - 9969 353 301

10 Fig. 10.1 shows an incomplete electrical circuit.

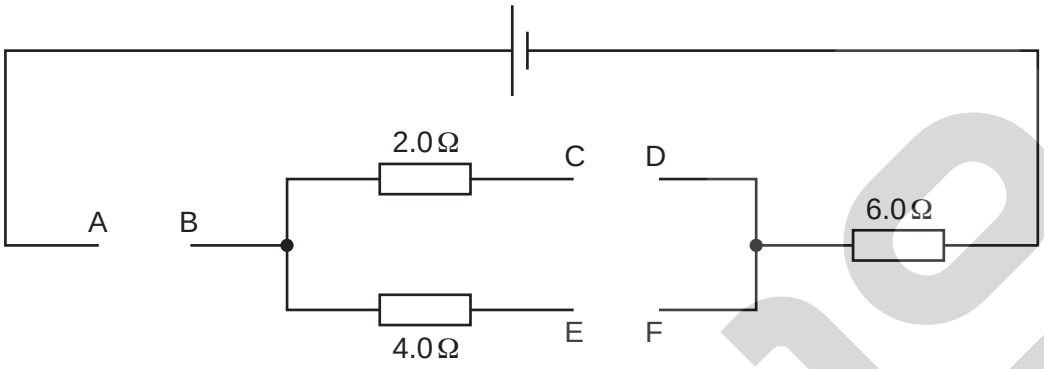

Fig. 10.1

(a) **(i)** A student completes the circuit and measures the current in the 6.0 Ω resistor.

On Fig. 10.1, draw an ammeter symbol in one gap and straight lines to indicate wires in the other gaps to show how the student should do this. [1]

(ii) A voltmeter is connected to measure the potential difference (p.d.) across the 4.0 Ω resistor.

On Fig. 10.1, draw a voltmeter symbol connected in the correct position. [2]

(iii) With the circuit completed, the current in the 2.0 Ω resistor is 2.5 A.

Calculate the current in the 6.0 Ω resistor.

current = ... [4]

www.root19.com +91 - 9969 353 391

(b) Fig. 10.2 shows the same electrical circuit with an alternating current (a.c.) power supply and a wire in the gap AB.

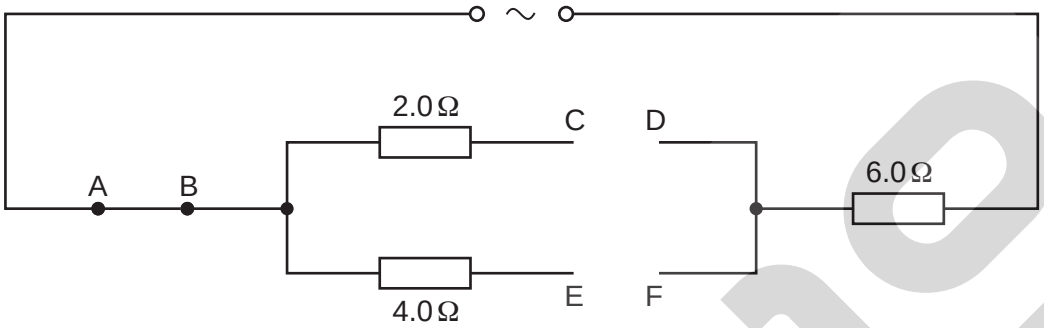

Fig. 10.2

On Fig. 10.2, draw a diode symbol in one gap and a straight line to indicate a wire in the other gap so that there is a current from right to left in the 4.0 Ω resistor and an alternating current in the 2.0 Ω resistor. [2]

[Total: 9]

www.root19.com +91 - 9969 353 301

11 **(a)** State **two** differences between nuclear fission and nuclear fusion.

1 .....

.....

2 .....

.....
[2]

(b) Radioactive tracers emitting γ-rays can be used in medicine. The half-life of the source of these γ-rays is 6 hours.

(i) Explain why a source of γ-rays used in this way should not have a half-life shorter or longer than about 6 hours.

.....

.....

.....

..... [2]

(ii) Technetium-99 is a source of γ-rays often used as a radioactive tracer. It is produced from molybdenum-99 which emits β-particles. The symbol for technetium is Tc and the symbol for molybdenum is Mo.

Complete the nuclide equation for this decay.

$$^{99}_{42}\text{Mo} \rightarrow \,^{\ldots\ldots}_{\ldots\ldots}\text{Tc} + \,^{\ldots\ldots}_{\ldots\ldots}\beta$$

[3]

(iii) Technetium-99 is a radioactive nuclide.

State another use of radioactive nuclides in medicine.

.....

..... [1]

[Total: 8]

Permission to reproduce items where third-party owned material protected by copyright is included has been sought and cleared where possible. Every reasonable effort has been made by the publisher (UCLES) to trace copyright holders, but if any items requiring clearance have unwittingly been included, the publisher will be pleased to make amends at the earliest possible opportunity.

To avoid the issue of disclosure of answer-related information to candidates, all copyright acknowledgements are reproduced online in the Cambridge Assessment International Education Copyright Acknowledgements Booklet. This is produced for each series of examinations and is freely available to download at www.cambridgeinternational.org after the live examination series.

Cambridge Assessment International Education is part of the Cambridge Assessment Group. Cambridge Assessment is the brand name of the University of Cambridge Local Examinations Syndicate (UCLES), which itself is a department of the University of Cambridge.